LAUREL BRIDGE
Orchestrating Medical Imaging Workflow

A White Paper

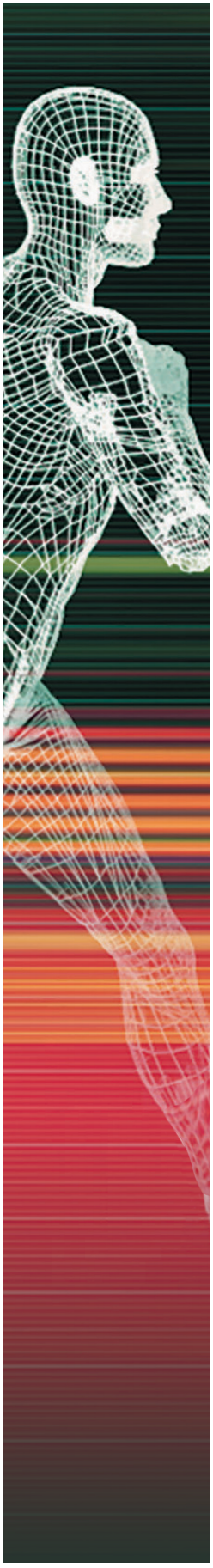

Medical Imaging AI: Why Robust and Adaptable Workflow is Required to Realize its Clinical Value

Overview

In the world of diagnostic imaging, artificial intelligence (AI) algorithms hold great potential for augmenting diagnostic imaging workflow by improving the speed, accuracy, and consistency of rendered diagnoses and treatment plans. For example, automatic prioritization of clinically urgent conditions (e.g., stroke, pulmonary embolism, pneumothorax, etc.), detection and identification of suspicious lesions, classification of disease states and severity (e.g., BIRADS), measurement of disease progression or regression (e.g., RECIST), and even hanging protocols that are based on the images themselves, all drive workflow efficiency and improve the diagnostic interpretation process and clinical outcomes. Ultimately, the value AI can bring to imaging workflow is measured by its ability to deliver meaningful results at a time and in a format that compliments diagnostic interpretation by seamlessly integrating into the infrastructure, applications, and processes of radiologists, referring physicians, and other clinical decision makers.

The challenge is that AI algorithms individually address unique and focused use cases – meaning many may be required to cover the clinical subspecialties and workflows in a leading health system. Each can be deployed individually or as a collection through app store integrations or pre-packaged platforms. They can integrate at any point along the imaging chain – within individual modalities, workflow engines, or PACS – and present results using a myriad of different messaging, markup objects, or reports. Considering the vast and growing number of AI algorithms available, what may initially seem simple can quickly become a complex and costly integration exercise that can actually diminish clinical workflow by introducing superfluous steps, disruptions, or delays.

To truly harness the benefits of AI in medical imaging, healthcare IT professionals and developers of these applications must address the challenges associated with deploying, integrating, and implementing AI in clinical workflow to maximize quality, efficiency, and financial value.

To harness the benefits of AI in medical imaging, healthcare IT professionals and developers of these applications must address the challenges associated with deploying, integrating, and implementing AI in clinical workflow to maximize quality, efficiency, and financial value.

Medical Imaging AI Workflow Deployment Scenarios

Learning how to effectively integrate AI into clinical practice begins with understanding the various deployment scenarios. Algorithms can be delivered as individual applications or packaged collections and can be deployed using an on-premises, cloud-based, or marketplace model. In all cases, newly acquired DICOM studies, and in some cases associated relevant priors, are routed from their sources (modality, PACS, or VNA) to an AI server where DICOM header and/or image-level analysis is performed. Resulting findings are delivered in a variety of proprietary or standards-based formats including HL7 ORUs, encapsulated PDFs, new or updated attributes within the DICOM header, or new series, images, presentation states, or structured report objects. These results can be forwarded to the EHR or RIS for incorporation into the medical record and billing; to the workflow manager to inform case prioritization and assignment decisions; and/or to the PACS for presentation to the radiologist during the diagnostic interpretation process. Key factors that influence which deployment model is most appropriate include the routing and data processing performance, integration and interface complexity, and privacy and security requirements.

On-Premises Workflow

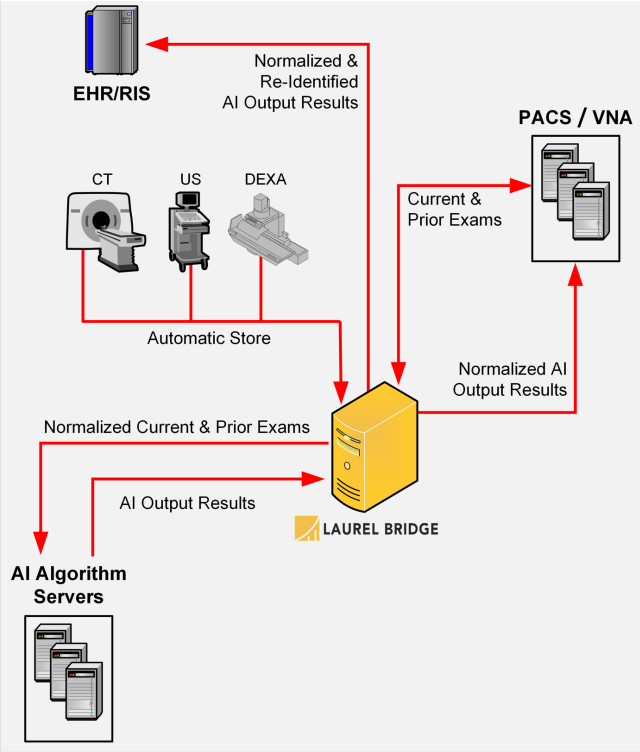

On-Premises

On-premises deployments leverage local servers and storage infrastructure to host individual or collections of AI algorithms that integrate directly into the site's image acquisition workflow – either at the modality, as a post-processing activity prior to radiologist interpretation, or embedded within the PACS system itself. In this model, AI servers are often located in close proximity to data sources, mitigating potential performance concerns associated with data transfer between systems. Workflow tools, whether part of the local infrastructure or integrated into the AI deployment, are often required to inspect data attributes and perform normalization and transformation on-the-fly to accommodate the differing data models that exist in multi-vendor environments.

Cloud-Hosted Workflow

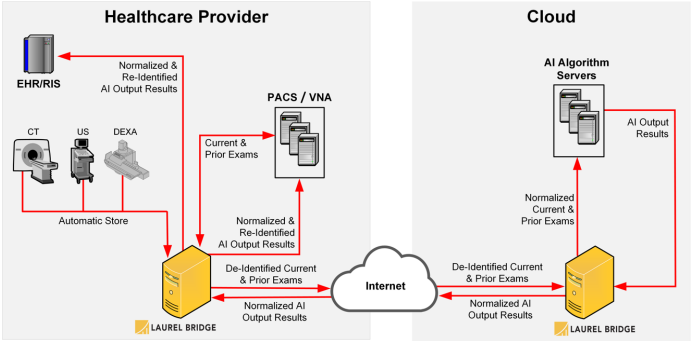

Cloud-Hosted

Similarly, cloud-deployed AI algorithms also route, inspect, and translate DICOM data between algorithms and clinical systems. However, in this model analysis is performed in a private (vendor-hosted) or public (AWS, Azure, or Google) cloud environment. Because of its inherent hub-and-spoke design, this model scales well to support multi-site organizations, integrated delivery networks (IDNs), or health information exchanges (HIEs). However, it can be susceptible to performance challenges where transfer volumes and/or object sizes are significant, and often introduces additional privacy and security requirements. In many cases, business association agreements (BAAs) require de-identification of all protected health information (PHI) being sent to the cloud to ensure privacy is maintained. As well, ensuring secure and encrypted channels are established between local and cloud-hosted environments, without the added complexity of managing separate virtual private network (VPN) connections is a priority.

AI Marketplace Workflow

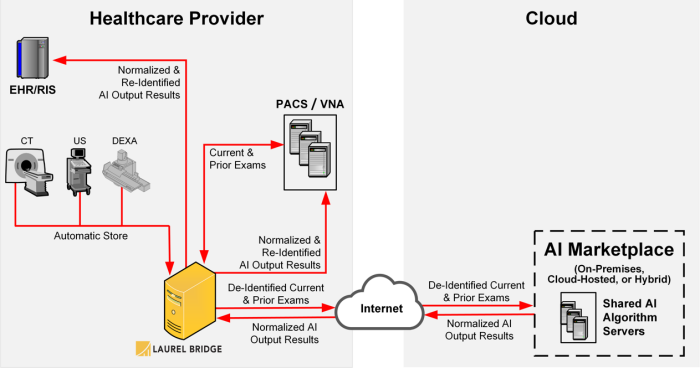

AI Marketplace

Finally, AI marketplaces are pre-packaged collections of algorithms, often from a variety of vendors, that share common

infrastructure and integration methods. The primary advantage of such platforms is the flexibility and ease with which additional algorithms can be purchased and integrated once the initial platform has been deployed (similar to an `app store' model). Because they share a common infrastructure, there is the potential for data models to be aligned across hosted algorithms, which can reduce some of the complexity associated with data transformation. An AI marketplace can be deployed on-premises, in the cloud, or as a hybrid model depending on site-specific preferences and the underlying requirements of the algorithms in use.

Medical Imaging AI Workflow Challenges

Regardless of the deployment model used, there are some common challenges that exist with integrating AI into medical imaging workflow. To ensure maximum value is realized, it is essential that AI augment and enhance workflow – not add additional manual steps. Unfortunately, in many cases a lack of interoperability and proprietary integration requirements have resulted in a number of cumbersome processes across the imaging chain.

Automating AI Workflow

The first challenge is determining when an AI algorithm is to be run. Because pricing is often based on a per-study model, healthcare organizations can sometimes be selective when deciding which cases are sent for analysis. For instance, instead of sending all MRIs of the head for analysis by a brain quantification algorithm, only MRIs of the head where protocols or clinical symptoms indicate a possible Alzheimer's or dementia diagnosis are sent for analysis. In many cases identification and forwarding of these studies to the AI server is a manual process, performed at the modality by technologists or at the time of interpretation by a radiologist seeking a second opinion. While these manual processes can reduce overall costs by avoiding unnecessary analyses, they add additional steps to the imaging workflow and introduce the potential for missed findings when an appropriate analysis is not performed.

Supporting Real-Time Analysis

For algorithms that perform real-time analysis to proactively identify urgent clinical conditions (e.g., pulmonary embolism, pneumothorax, or stroke) performance is a top concern. Such algorithms typically drive reading workflow by prioritizing clinically urgent cases, actively monitoring turnaround times, and generating escalations if cases are not read in a timely manner. To ensure maximum impact, it is essential that relevant studies are routed to the AI server and results are delivered to the workflow manager in a timely fashion as any delays in this process could have a very serious negative impact on clinical outcomes for affected patients.

Accessing Relevant Priors

For algorithms that quantify disease progression, prior images or reports must be provided alongside the newly acquired studies for analysis and comparison. The challenge is that data content and formats are highly variable and reside in imaging silos that cannot be easily or efficiently integrated. Therefore, manual processes are often required to locate, collect, and standardize priors that are considered clinically relevant before they can be sent for AI analysis.

Adapting to AI and Machine Leaning (ML) Nuances

Balancing the needs and requirements of AI and ML workflows calls for an adaptive approach to data collection and results delivery. AI (which in this context refers to validated, static algorithms) integrations are bi-directional. Data is sent from its source to the AI server for analysis, and then results are sent back to one or more clinical systems for integration into the diagnostic interpretation workflow and patient record. Conversely, ML (which leverages large datasets and prior results to automatically train and refine algorithms) requires a unidirectional interface that is able to send de-identified data to training servers to support real-time data collection and continuous algorithm development.

Results Delivery

AI results are delivered in a variety of formats – many of which may not be natively supported or understood by downstream systems. This is especially true in multi-vendor environments where AI, modality, and PACS vendors differ. In this case, workflow for the radiologist becomes fragmented. Results are presented using inconsistent workflow paradigms, which is distracting and confusing for radiologists. As well, additional steps are sometimes required to search for and view AI images or reports, sometimes in a separate application or viewer. This results in additional effort on the part of the radiologist – sometimes increasing, rather than optimizing, turnaround times. Such cumbersome workflows are rarely, if ever, successfully adopted long-term.

Automating Billing

There are an increasing number of AI algorithms that qualify for reimbursement. Unfortunately, similar to point-of-care devices, many AI workflows are not integrated into billing workflows. As a result, manual workflows are put in place to record AI transactions in billing systems resulting in added cost associated with human effort or billing never occurs resulting in missed

revenue opportunity. In either case, the overall return-on-investment for AI is diminished.

Choose Tools to Ensure Medical Imaging AI Value is Realized

The above deployment and workflow challenges highlight the need for flexible workflow orchestration tools that:

- Facilitate the seamless integration of diverse AI algorithms into the enterprise imaging ecosystem.
- Automate and optimize workflow.
- Achieve successful adoption by technologists, radiologists, and other clinicians.

The following workflow tools and capabilities are required to achieve maximum clinical, operational, and financial value from imaging AI:

Secure, Encrypted Communications

The first hurdle to be overcome in any AI deployment is ensuring secure connections between imaging and AI systems across the enterprise can be established. Workflow tools that enable encrypted communication within and across networks without the need for dedicated VPNs are an ideal solution to ensure simple yet secure AI integration.

Privacy and HIPAA Compliance

In cloud-based models, ensuring HIPAA compliance and BAA requirements are met sometimes requires workflow and auditing tools that can reliably de-identify and track patient data when it is sent outside its host environment. Adding further value, providing anonymous crosswalks that link de-identified study identifiers to their fully identified counterparts enables AI and ML developers or clinical researchers to follow a specific patient or cohort, without compromising privacy.

Data (Re)Modeling and Normalization

Whether independent or part of a pre-packaged platform, AI algorithms each address very narrow and specific use cases and have unique data requirements. To realize the full potential of AI at the enterprise level data, management tools that adapt to the distinct needs of each system in the imaging chain are required. These tools can automatically re-structure DICOM fields, standardize attributes, and apply compression to facilitate efficient transmission and communication across enterprise systems.

Flexible & Reliable Routing

There are many steps along the imaging chain. Ensuring imaging studies are provided to EHRs, RISs, workflow managers, PACS, and VNAs in a complete, understandable, and timely manner calls for sophisticated workflow solutions. Such solutions automate the discovery, retrieval, and normalization of new exams and associated priors from across the enterprise and manage the distribution and translation of AI results to downstream systems. They must also have the intelligence to manage failure scenarios that inevitably arise from human error or unplanned process, execute retries that attempt to account for such situations and send automatic notifications to key individuals when such scenarios arise.

Conversely, these same tools are sometimes required to remove or suppress AI results from the diagnostic report and imaging record when sent to outside stakeholders such as referring physicians or patients. Such tools allow a rules-based approach that adapts to the unique needs of each distinct workflow, mitigates medical-legal risk, automates manual processes, and delivers a seamless integration of AI results into the diagnostic interpretation process.

EHR and Billing

To maximize reimbursement potential associated with the generation and utilization of AI results, it is essential that medical imaging AI be effectively integrated into ordering and billing workflows. This requires an encounters-based approach that automates the generation of HL7 ORMs and ORUs whenever a qualifying AI algorithm is run to trigger billing events in the RIS or EHR.

To ensure maximum value is realized, it is essential that AI augment and enhance workflow – not add additional manual steps.

LAUREL BRIDGE

Orchestrating Medical Imaging Workflow

Case Examples

The Laurel Bridge AI Workflow Suite (AIWS) leverages the industry-leading functionality of the Compass Routing Workflow Manager, Navigator Imaging Retrieval Workflow Manager, and Waypoint Consolidated Encounter & Modality Worklist solutions to:

- Simplify the deployment of medical imaging AI algorithms.
- Optimize medical imaging AI workflow.
- Maximize the value-potential of AI investments.

The following examples highlight the diverse clinical use cases where Laurel Bridge Software was able to automate imaging AI, ML, and billing workflows; ensure AI results are delivered to the right clinician at the right time; and enable integrations with existing IT systems to support new, advanced clinical and research workflows.

Cardiovascular AI Workflow: Echocardiography Analysis

To support AI-enabled echocardiogram (echo) software that detects cardiovascular disease, AIWS automates workflow by anonymizing and sending new echo studies received from the modality to a cloud-based AI server for analysis. PDF results are received and DICOM encapsulated before they are forwarded to PACS for review by the cardiologist and long-term archival. To complete the workflow, a notification is automatically sent to the EHR to trigger customer billing.

Pulmonology Workflow: Lung Ventilation Analysis

Laurel Bridge AIWS enables real-time analysis of pulmonary function by routing fluoroscopy imaging of breathing lungs and associated priors to a cloud-based AI server for analysis. AIWS automatically de-identifies and routes current and prior studies, while optionally supporting manual prior selection and routing if an intermediate quality control (QC) step is required. A PDF report is returned containing lung function measurements, maps of lung ventilation patterns and airflow, and identified deficits in ventilation. This report is DICOM encapsulated by AIWS before being routed to PACS for radiologist review and incorporation into the patient's medical record.

Machine Learning Workflow: Ophthalmology

Laurel Bridge AIWS was deployed at a government research institution as a means to support the collection, de-identification, and sharing of millions of clinical studies to support deep learning initiatives. AIWS leveraged its flexible pre-fetching algorithms to automatically identify research cohorts from within ophthalmology. De-identification of image and report attributes was performed on all studies, and HL7 reports were automatically converted to DICOM secondary capture objects and attached to the DICOM studies to support downstream system requirements. Once processed by AIWS, studies are sent to a public cloud to enable ML algorithms to be trained in real-time.

Achieving Success Now and in the Future

AI will continue to play an increasingly important role in medical imaging and healthcare delivery in general. As new use cases emerge, imaging workflow must adapt to accommodate shifting data requirements and reading patterns. Powerful tools that address interoperability challenges and automate workflow between AI applications and EHR, RIS, PACS, and VNA systems are required to ensure that current and future algorithms can be quickly and effectively integrated into diagnostic interpretation and treatment processes.

To achieve successful adoption of medical imaging AI algorithms and maximize their value, this must be accomplished in a way that:

- Reduces manual effort and turnaround times.
- Ensures the right information is delivered to the appropriate system or clinician when needed.
- Compliments radiologist and physician workflows.
- Improves clinical, operational, and fiscal outcomes.

About Laurel Bridge Software

Laurel Bridge Software provides enterprise imaging workflow solutions that solve complex, mission-critical imaging workflows that often arise when multiple business entities and their disparate clinical imaging systems must be unified. Our solutions reliably ensure new and historical DICOM imaging studies, HL7 messages, and non-DICOM objects are available to the clinical staff, at the point-of-care.

Laurel Bridge's imaging workflow solutions are implemented at thousands of healthcare facilities, teleradiology service providers, and radiology group practices in more than 35 countries, directly and through integration partners.

More Information: info@laurelbridge.com